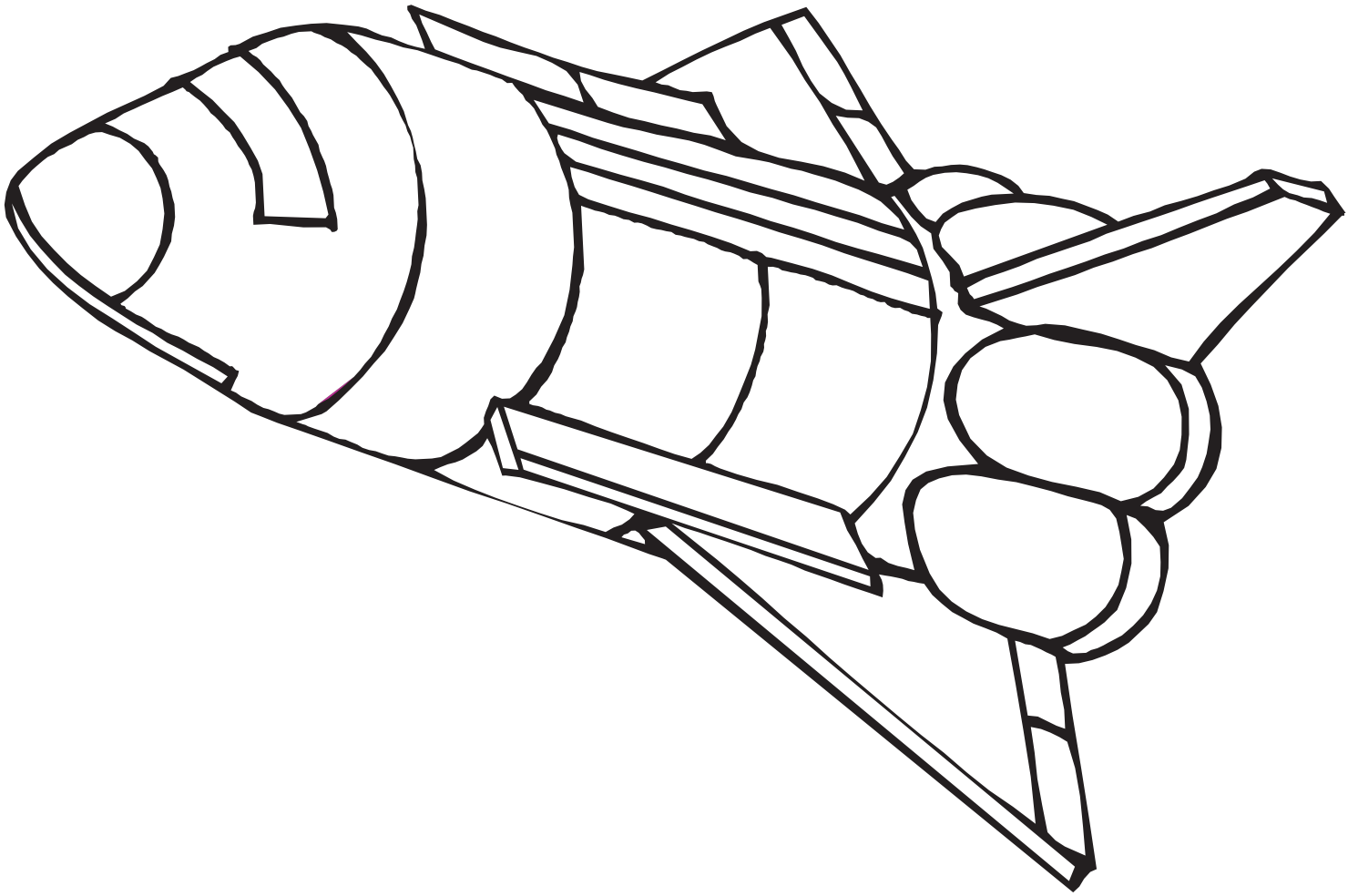

www.ColoringCastle.com